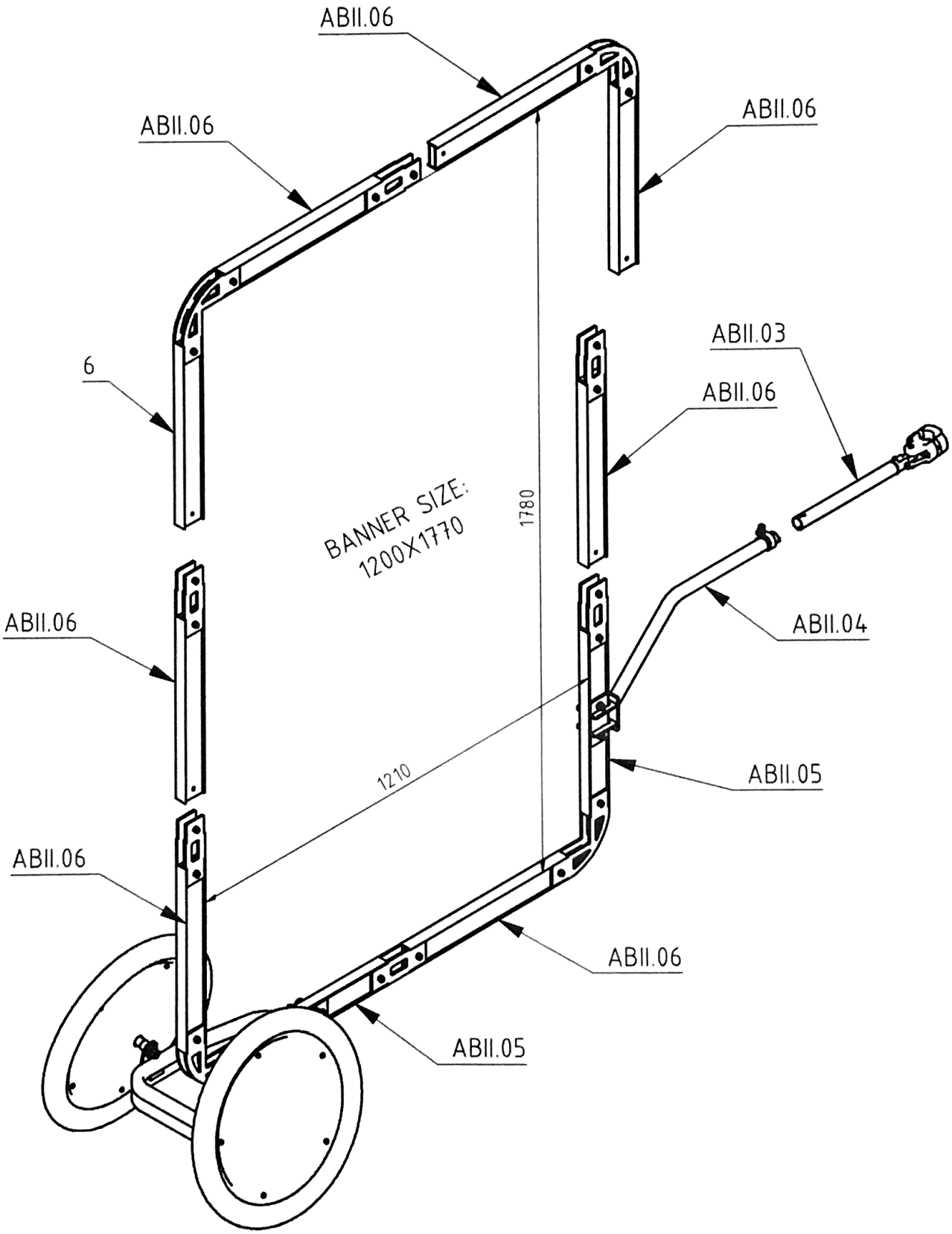
ABII.06
ABII.06
ABII.06
6
ABII.03
ABII.06
BANNER SIZE:
1200X1770
1780
ABII.06
ABII.04
1210
ABII.05
ABII.06
ABII.06
ABII.05

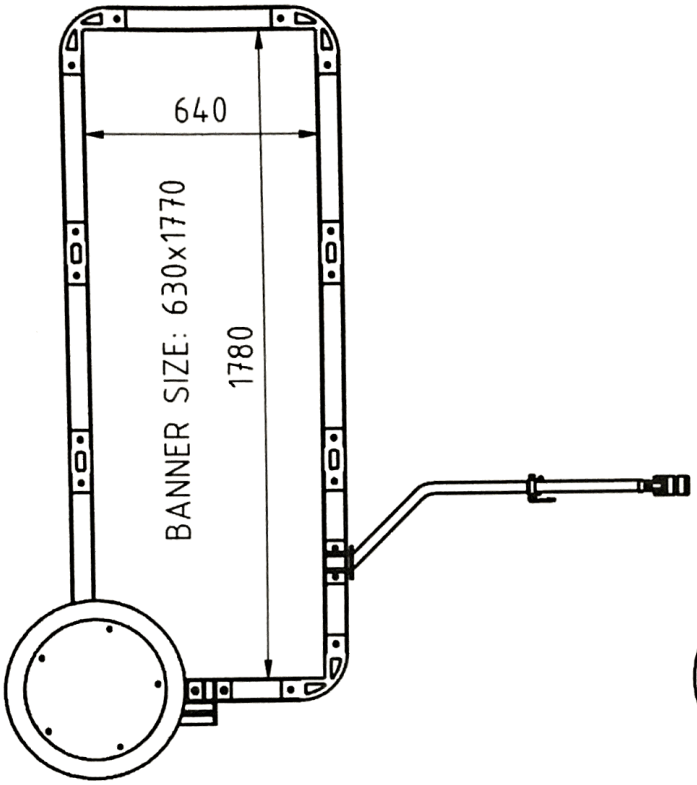
640
BANNER SIZE: 630x1770
1780

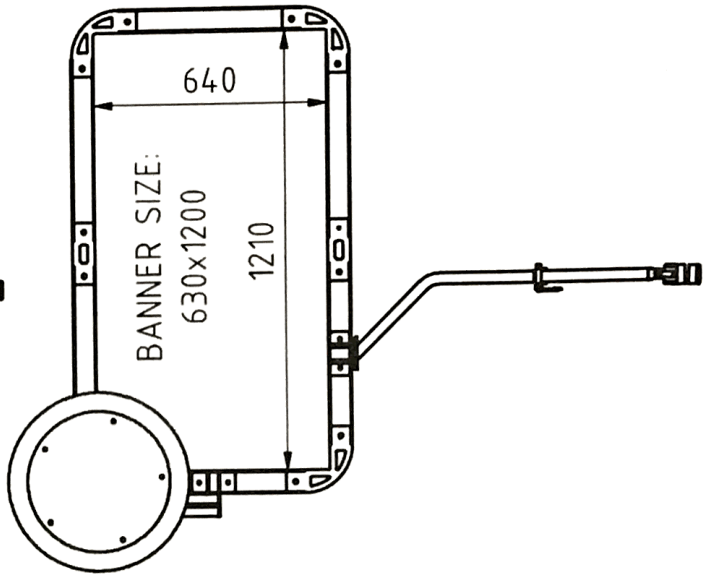
640
BANNER SIZE:
630x1200
1210

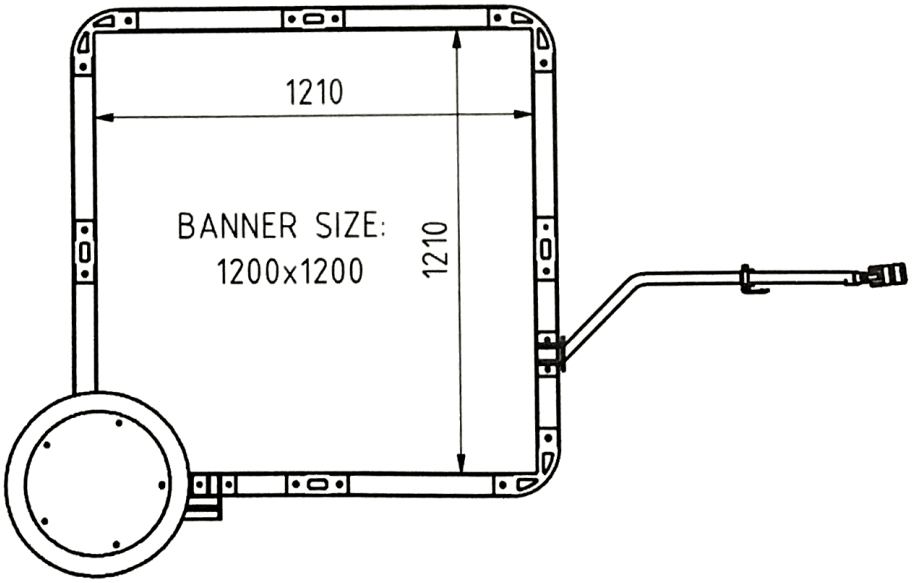
1210
BANNER SIZE:
1200x1200
1210

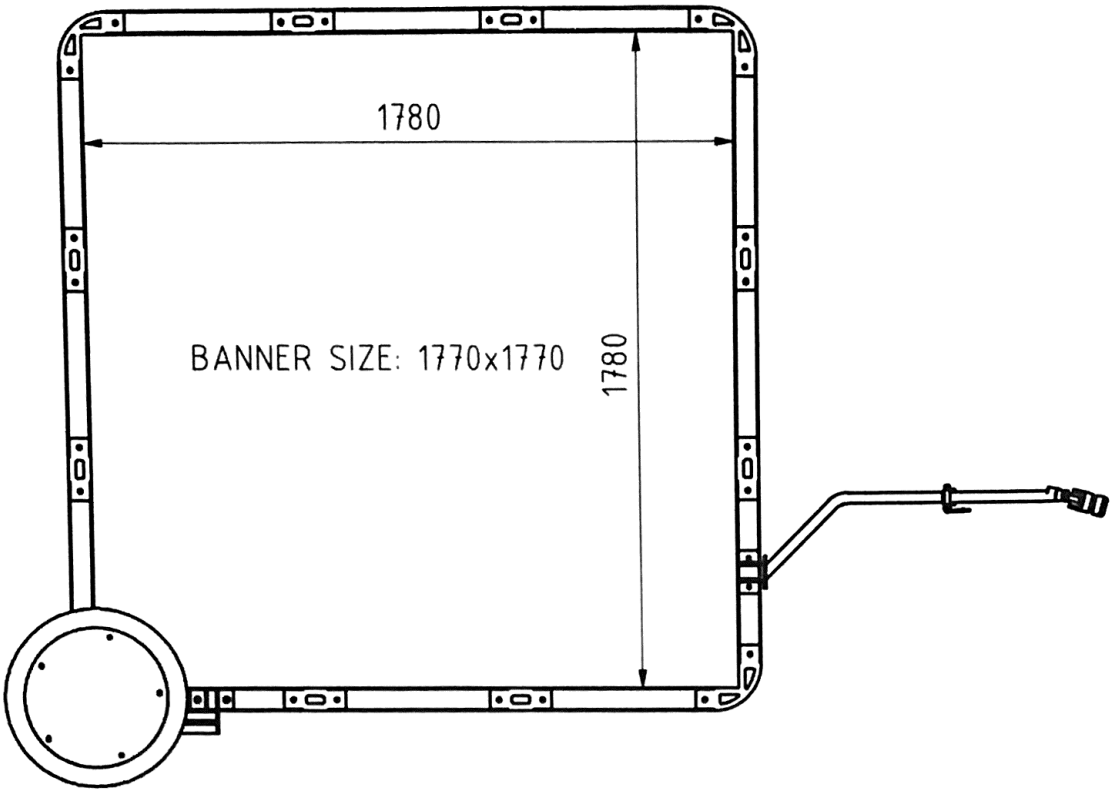
1780
BANNER SIZE: 1770x1770
1780

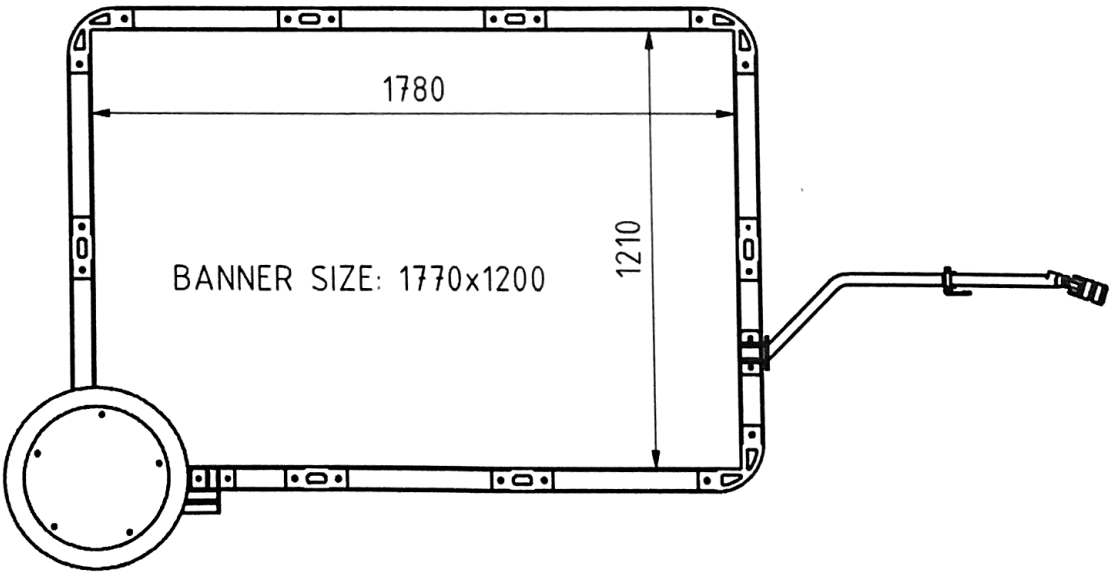
1780
BANNER SIZE: 1770x1200
1210

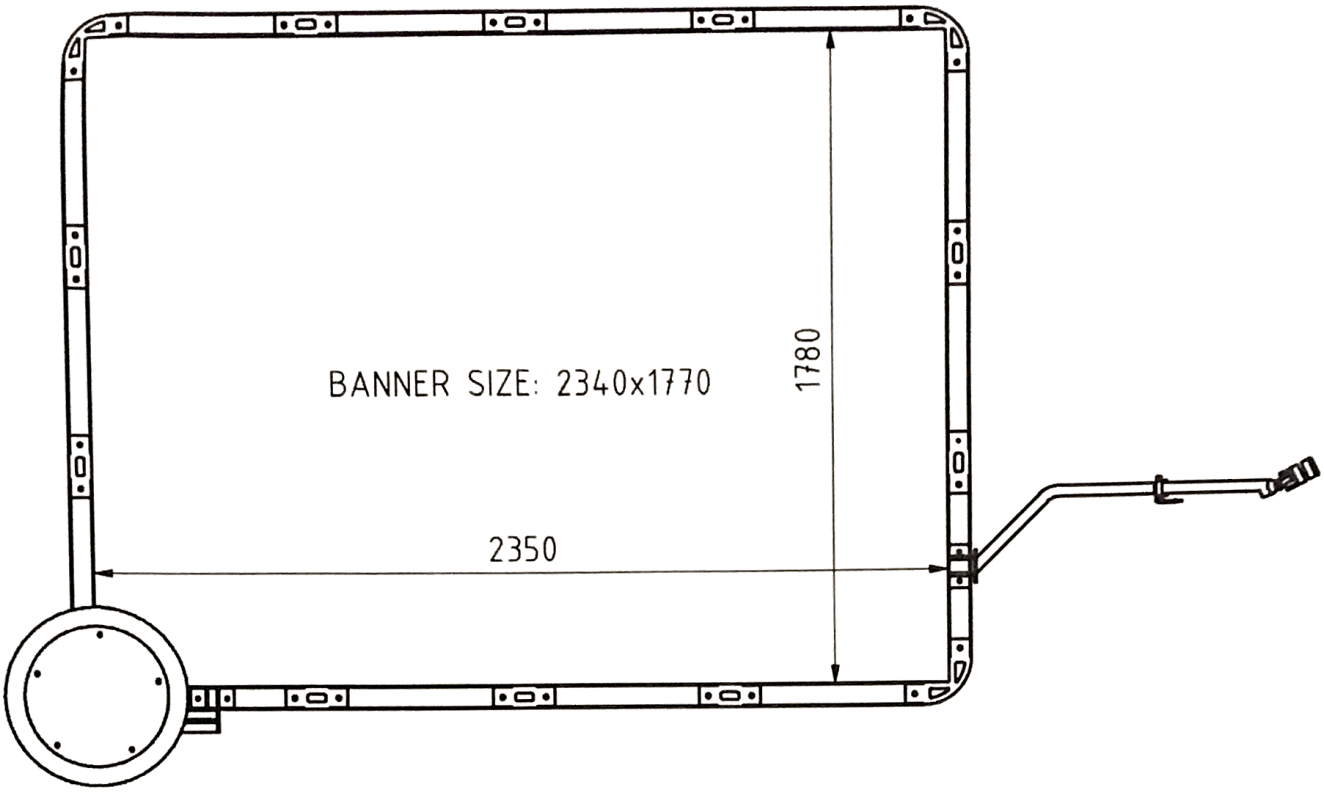
BANNER SIZE: 2340x1770
1780
2350

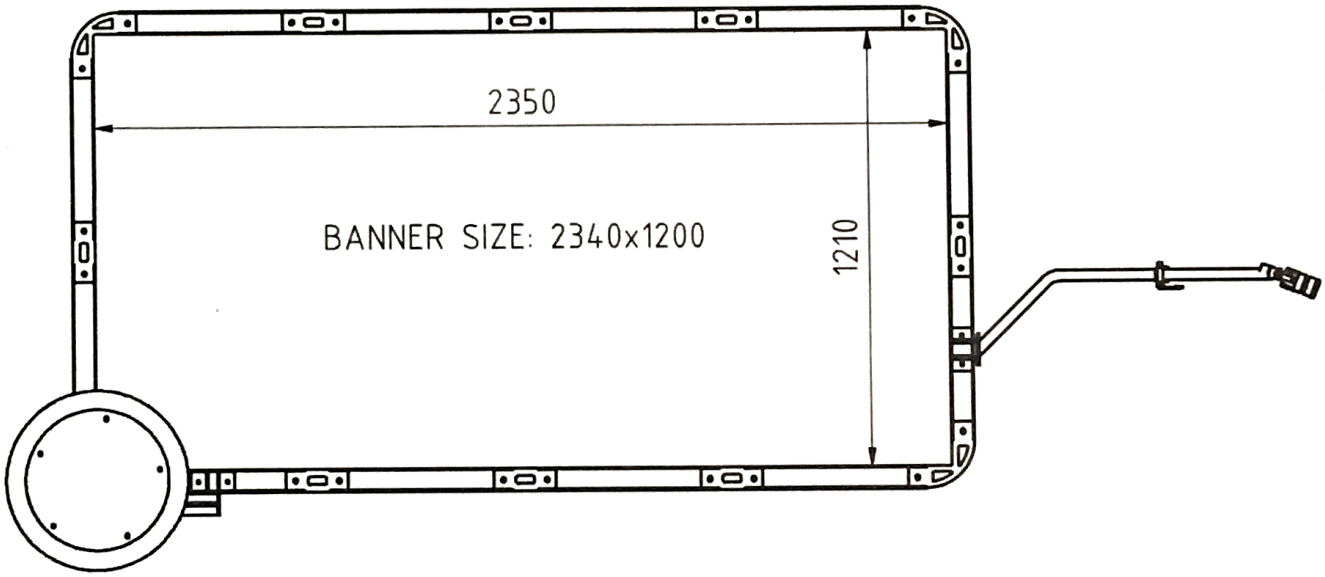
2350
BANNER SIZE: 2340x1200
1210

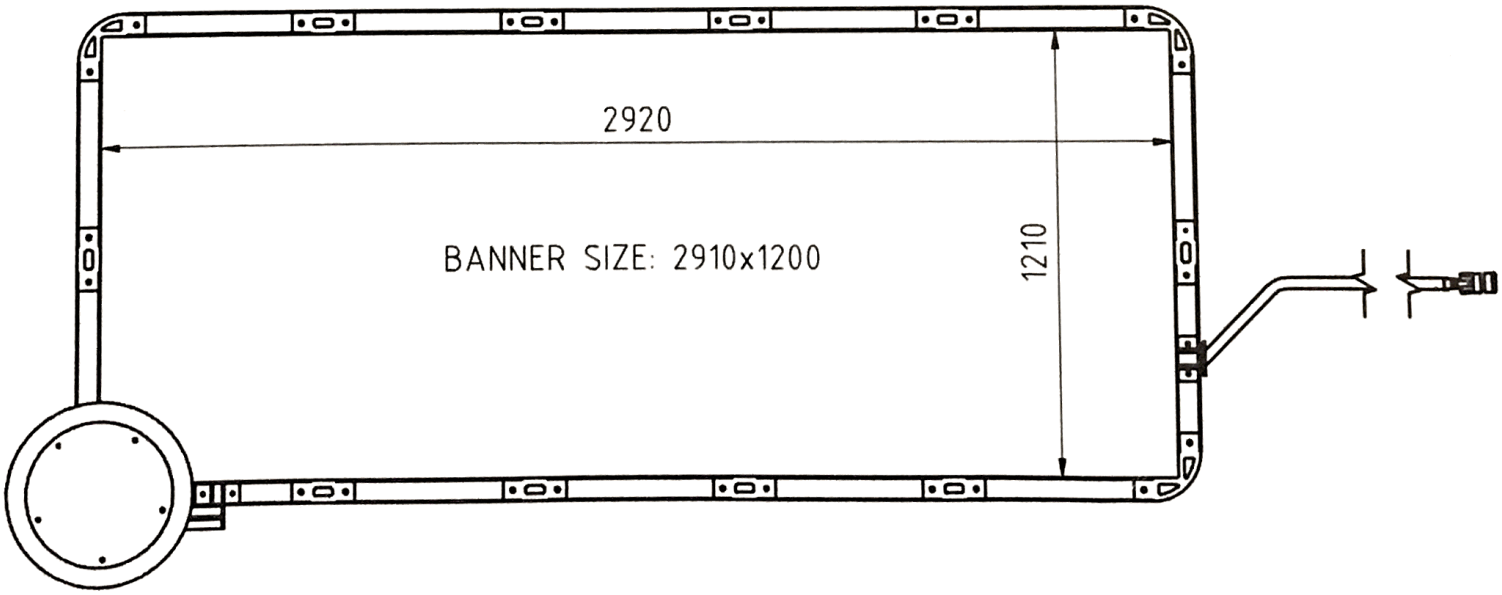
2920
BANNER SIZE: 2910x1200
1210